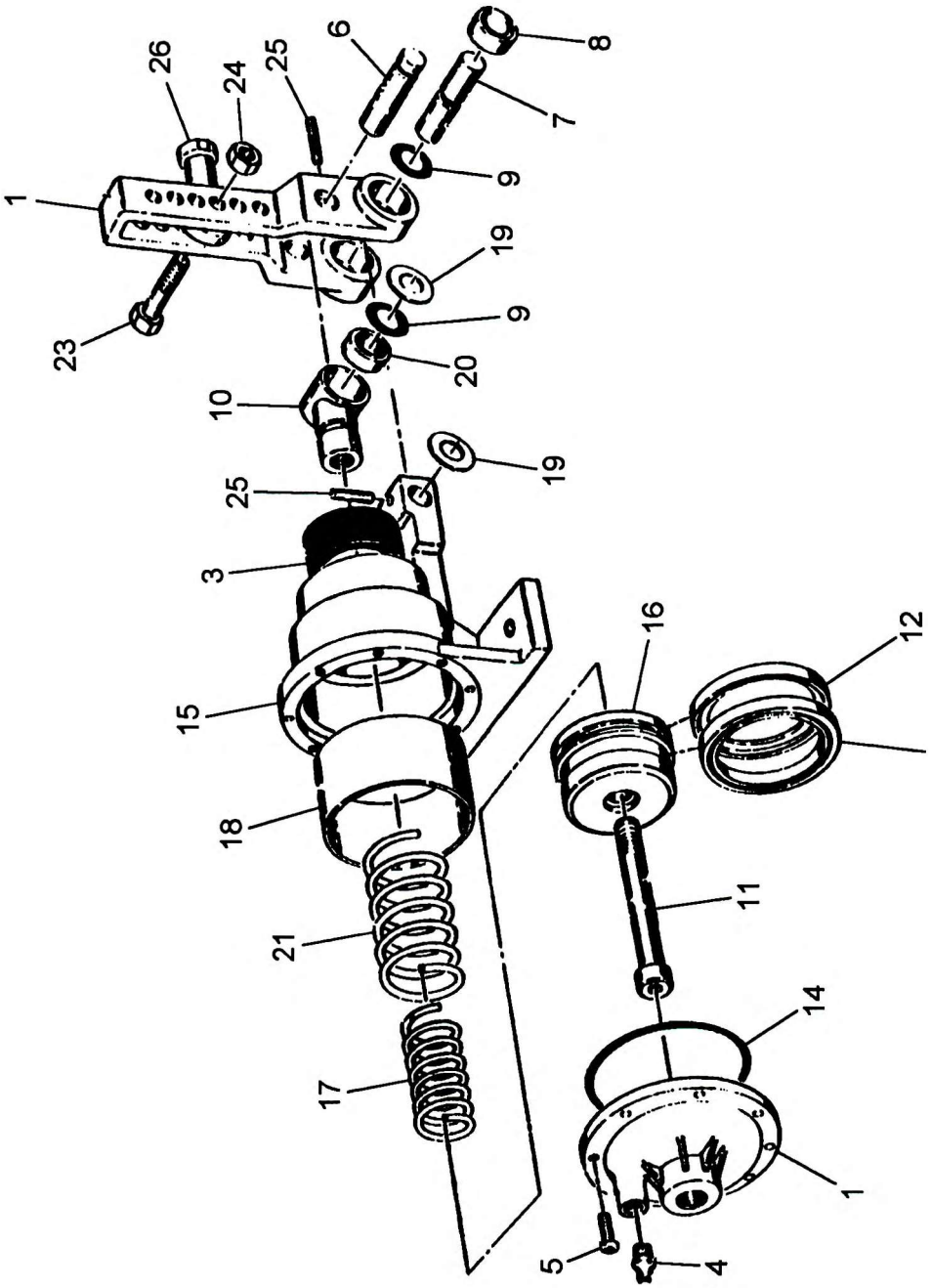

7372002534

(SHEET 1 OF 1)